ELECTRIC CONTROLLER LOCK

Installation guide:

We have two materials of electric controller lock. One is entire stainless steel,the other is entire iron. The lock adopts inside and outside opening double cylinders. It assembles electric controller lock device and loads adjusting of spring balance device & automatic reposition button.The features are:high Security,high insurance,electric controller,key turning, hand-operated the lock and lock opposition in order to prevent not key,closing the lock to prevent open the lock inside.It is used in residential,specially for the high class,building,department,school,hotel,factory storehouse and so on.It also uses with electric controller door.

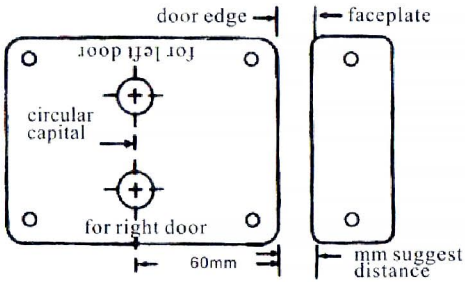

Installation steps:

Using the suitable screw to fix the mortise, Cylinder,striker on the door edge stably. There are 5mm length between latch andfaceplate. (as pic)

- Observing the fitting of door heavy and closer (if have) . If you find some noise or locked when close the door. Please use the 12 wrench or forcep to turn the 6 square screw.(ad pic) Repeating to adjust the load spring to balance when open or close the door.

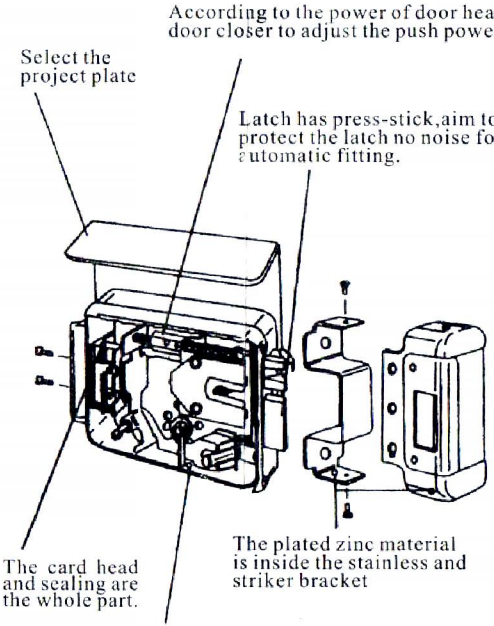

Over covering is dealed by phosphate and then printing

- When hook and slant latch are fitted opposition, the lock can be open from inside to outside as the same installation. After installed,the door will locked when you close.
- Put two extreme threads(as pic) to connect the AC/DC 8-12V,10W and then press the button for the switch one second.The lock will turn on. Otherwise,in order to prevent no key to press the button.You can use the key to insert it until the end of inside hole lock,and then pull out the key.

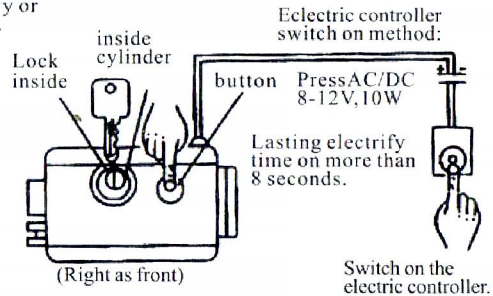

The thread diameter of copper according to the distance.

	mm^2	mm
10M	0.5	0.8
10-40M	1	1.2
40-60M	1.5	1.4
60-100M	2	1.6